Individual drum dryer

Drying of seed per drum individually is possible. The seed in a drum will automatically being dried to the desired equilibrium moisture content.

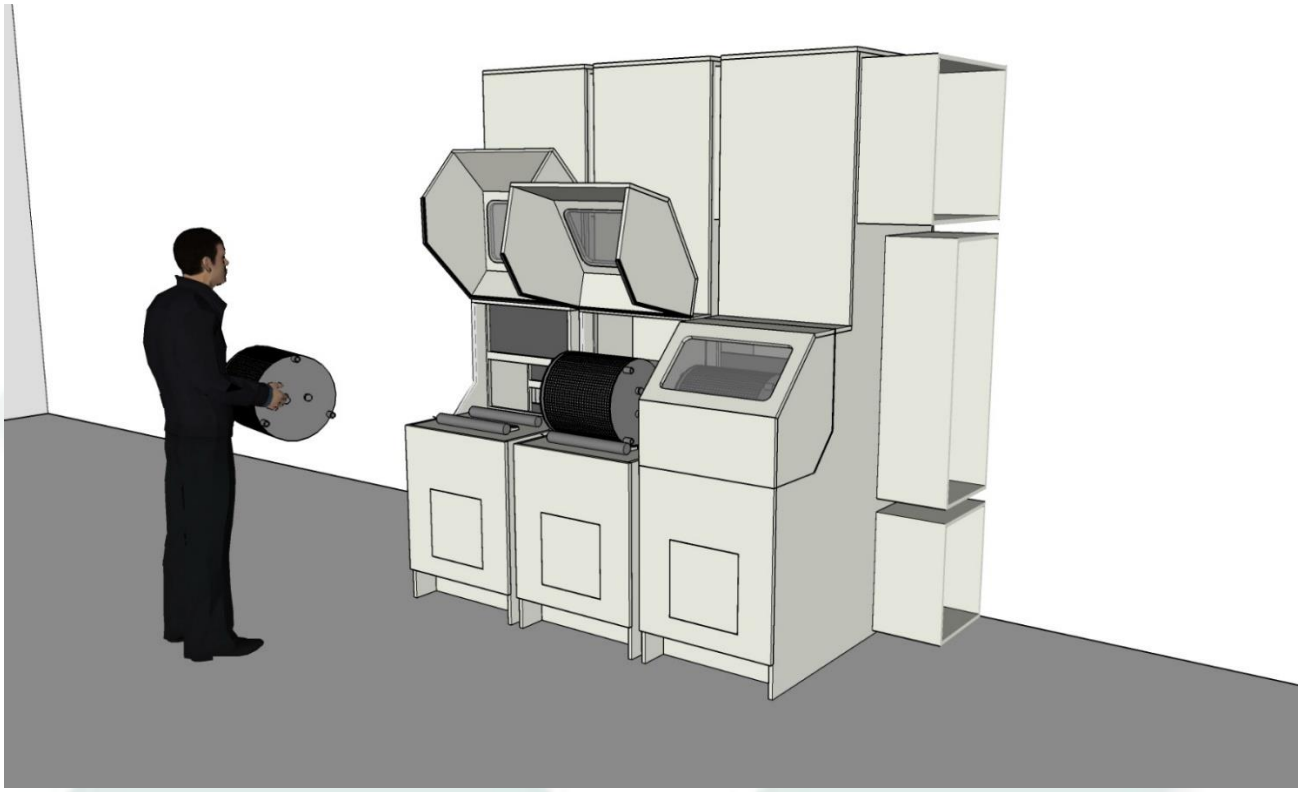

Per drum dryer setting of quantity-, temperature and Absolute Humidity (AH) of process air.

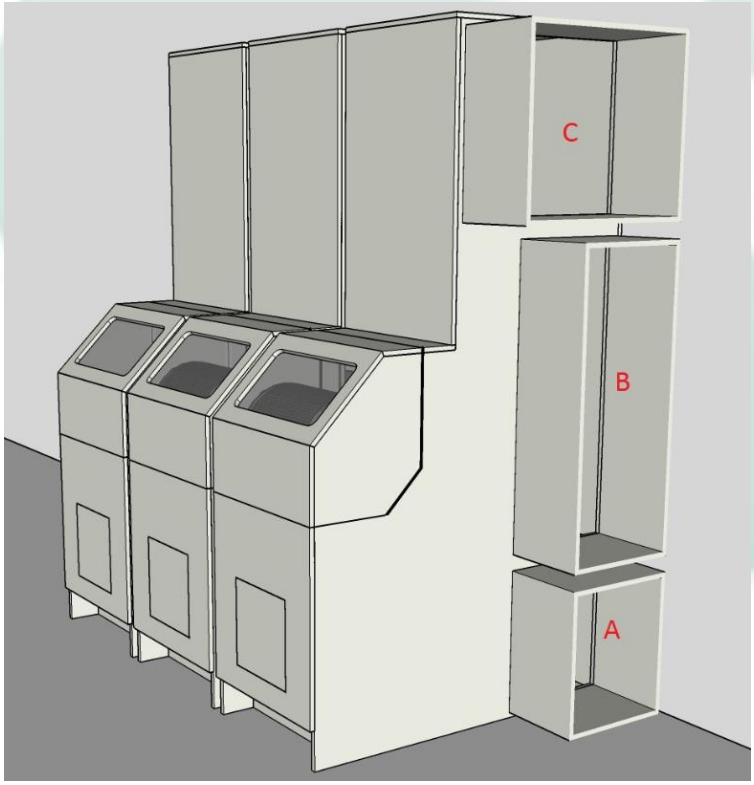

C: central airduct for outlet damp air
- **When air from the drum is more damp than outside, this will be dispatched.**

B: central airduct for inlet outside air
- **Starting with heated outside air a large quantity of water is drained.**
- **When required, dehumidified air will be added to a drum-unit to continue optimal drying.**

A: Central inlet for dehumidified air
- **Dehumidified air will enter a drum dryer when drier air is required.**
- **When air out of the drum is drier than outside, this will be recirculated.**
- **Drying continues with dehydrated air.**

Individual drum dryer

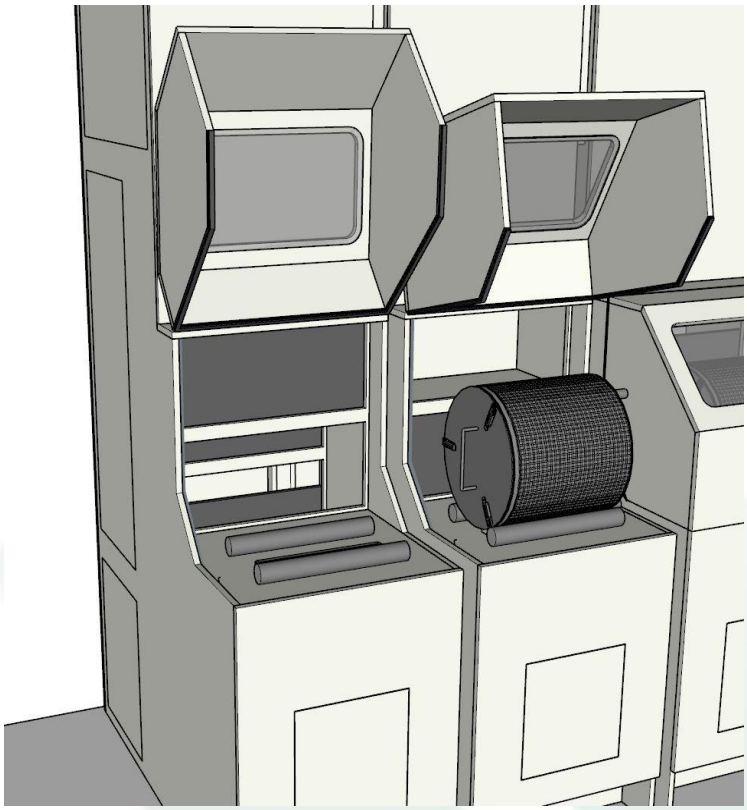

Slide inside for extracting outside or recycled air. Optional with dehumidified air.

Outside air is warmed up to the desired temperature to absorb moisture. Outside air and dehumidified air can be mixed to decrease AH and increase drying capacity.

When air out of the drum is more damp than outside, it will be dispatched outside (middle).

When air from the drum is drier than outside, this is recirculated and mixed with dehumidified air (left).

Final moisture from the product will be drained by dehumidified air.

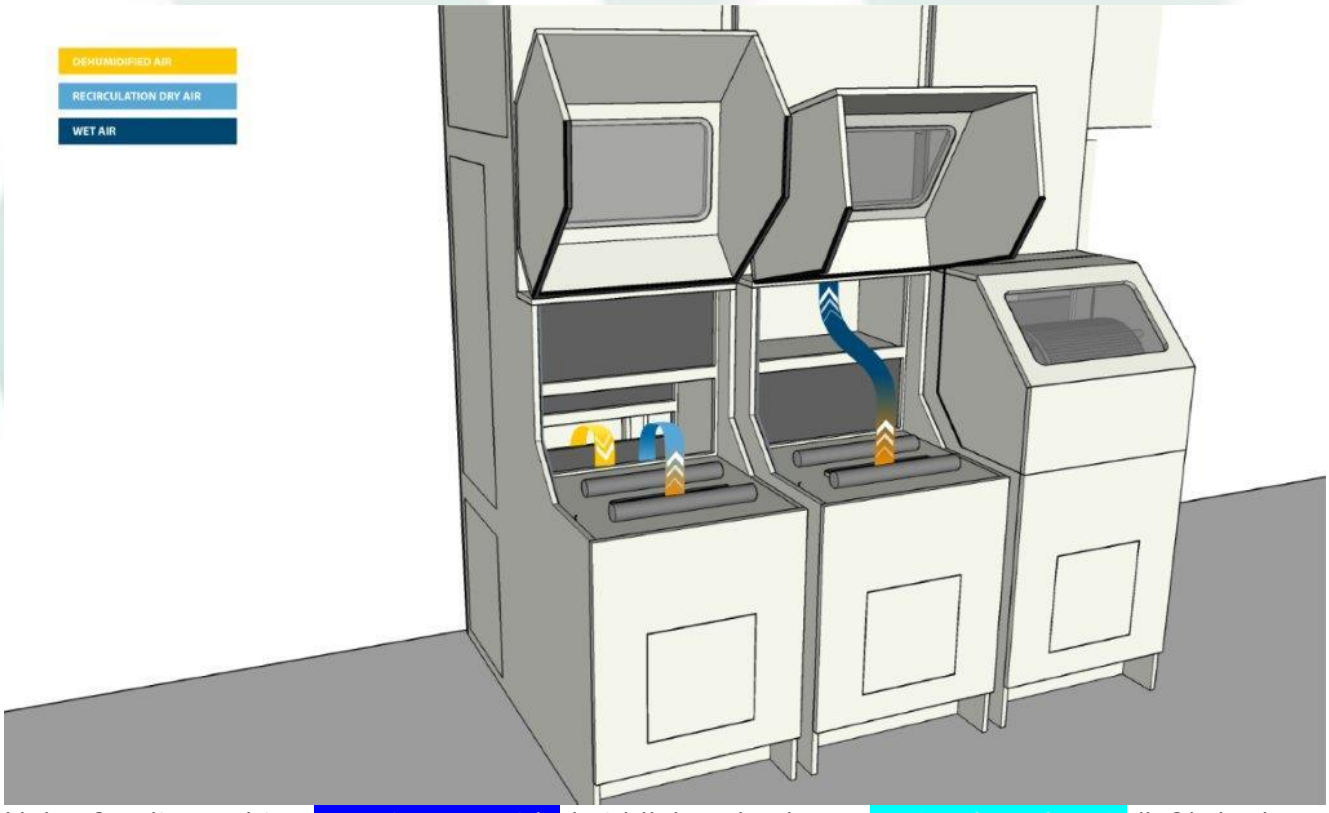

Valve for dispatching wet air to outside (middle) and valve to recirculate dry air (left). In the back a valve to bring dehumidified air to mix with outside air or recirculated air when required.

Drum ventilation unit

Basic ventilation unit for drum dryer installations.

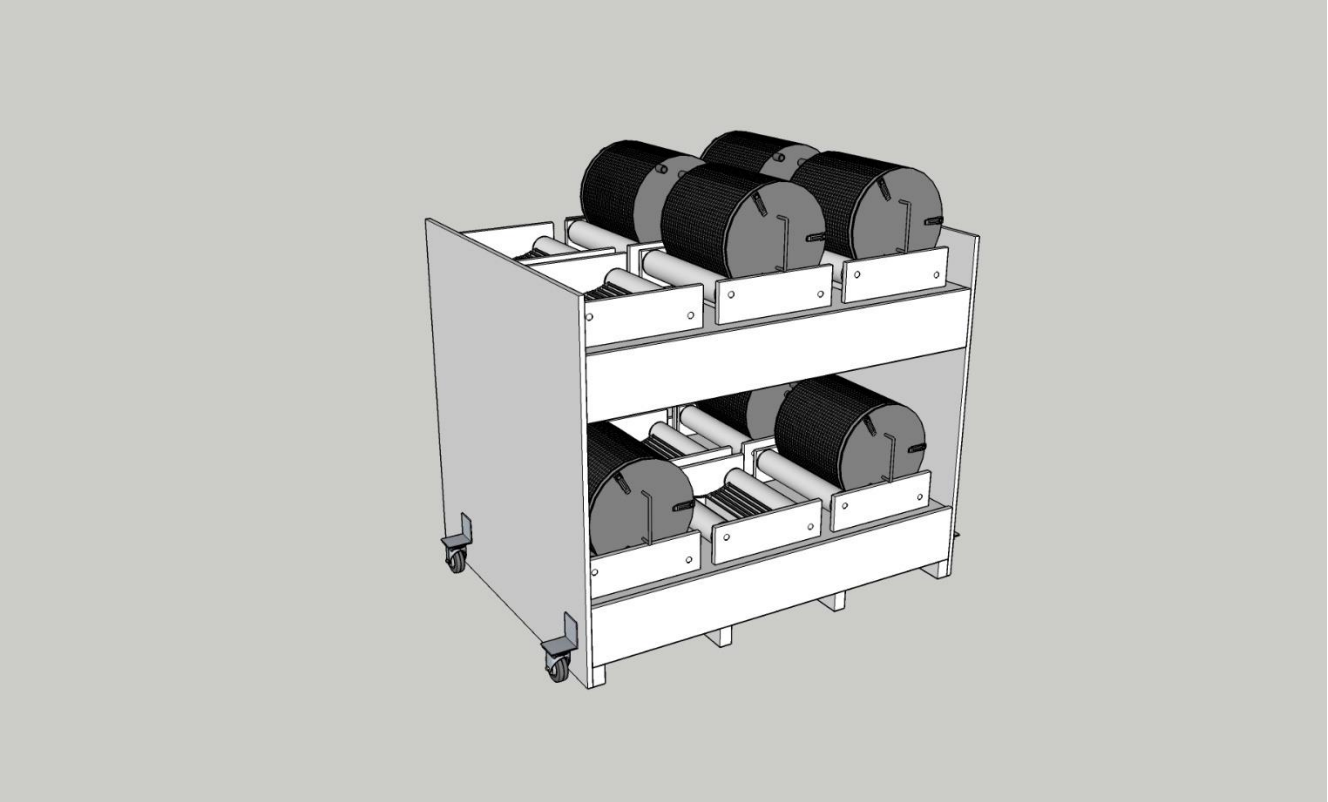

Standard 2x 6 drums, other capacities on demand.
Per level a roll drive with motor. The unit is easy to transport by rolls or by forklift

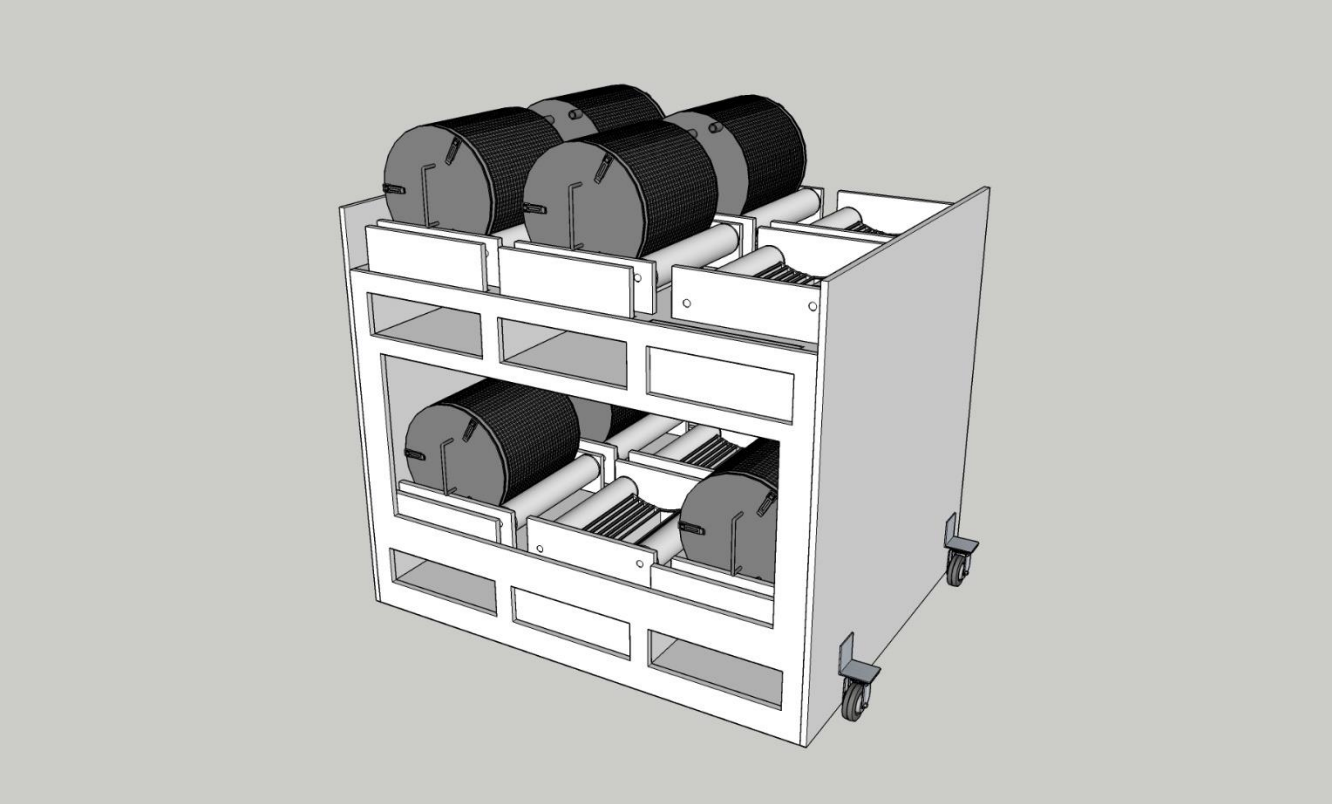

2x 3 inlets for 2 drums each. Each inlet has a slide for closing.

Agratechniek b.v.
Lou Nieuwenhuizen
DRYING INSTALLATIONS & EQUIPMENT

Drum ventilation unit

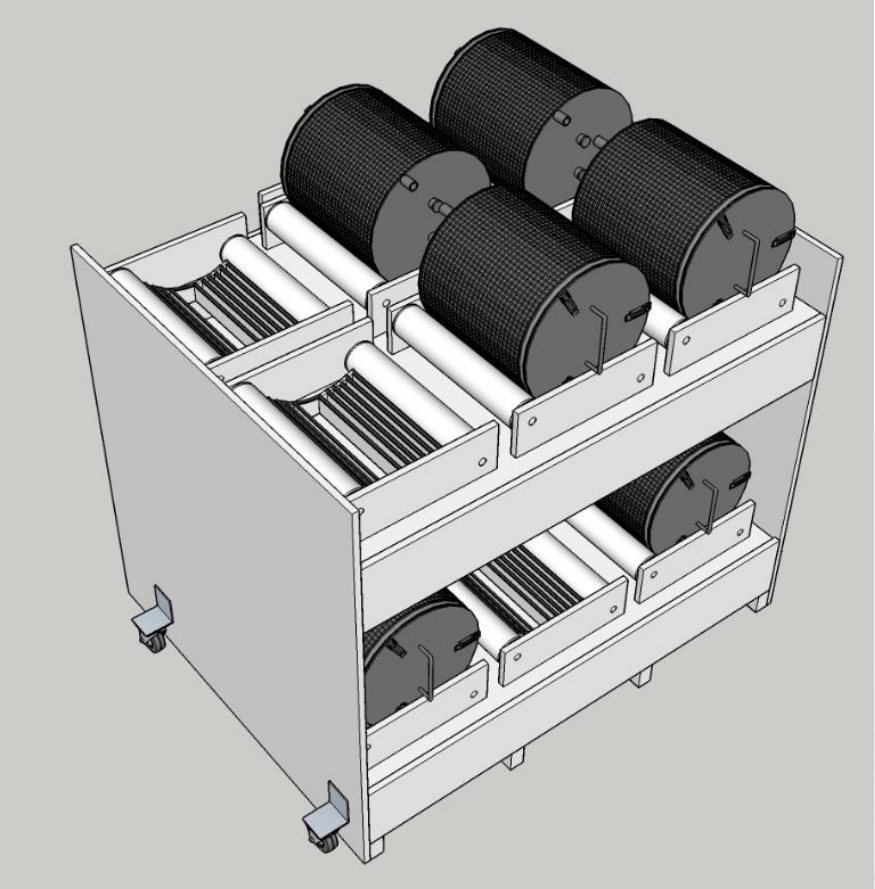

Motor driven roll per single, double or triple drums possible.

Per motor driven roll a variable speed is possible.

Ventilation unit tailor-made to fit for every type of drum.

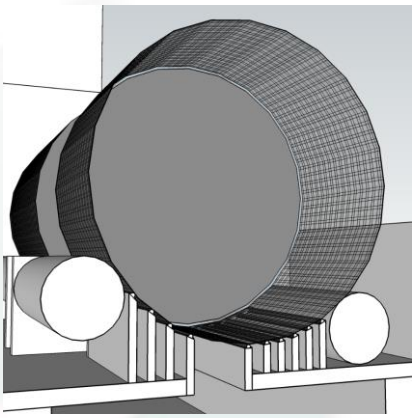

Special exhaust outlet to prevent air escaping along the seed instead of through it.

Ventilation units for different drum dryer installations

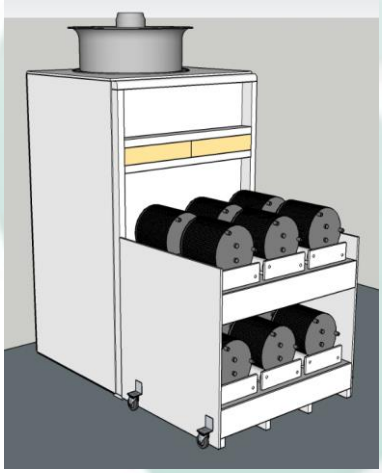

Box drying installation

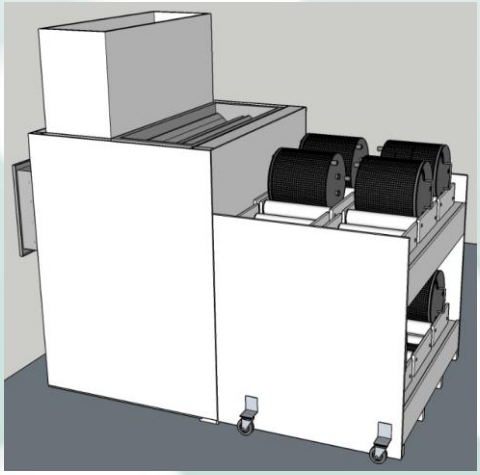

Open drumdryer

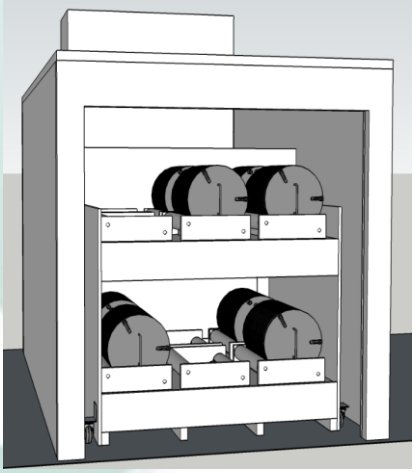

Closed drum dryer

See our prospect for more information about these drum dryers

Agratechniek b.v.
Lou Nieuwenhuizen
DRYING INSTALLATIONS & EQUIPMENT

Drum unit for box drying installation

Using your existing box dryer for drying seed in drums

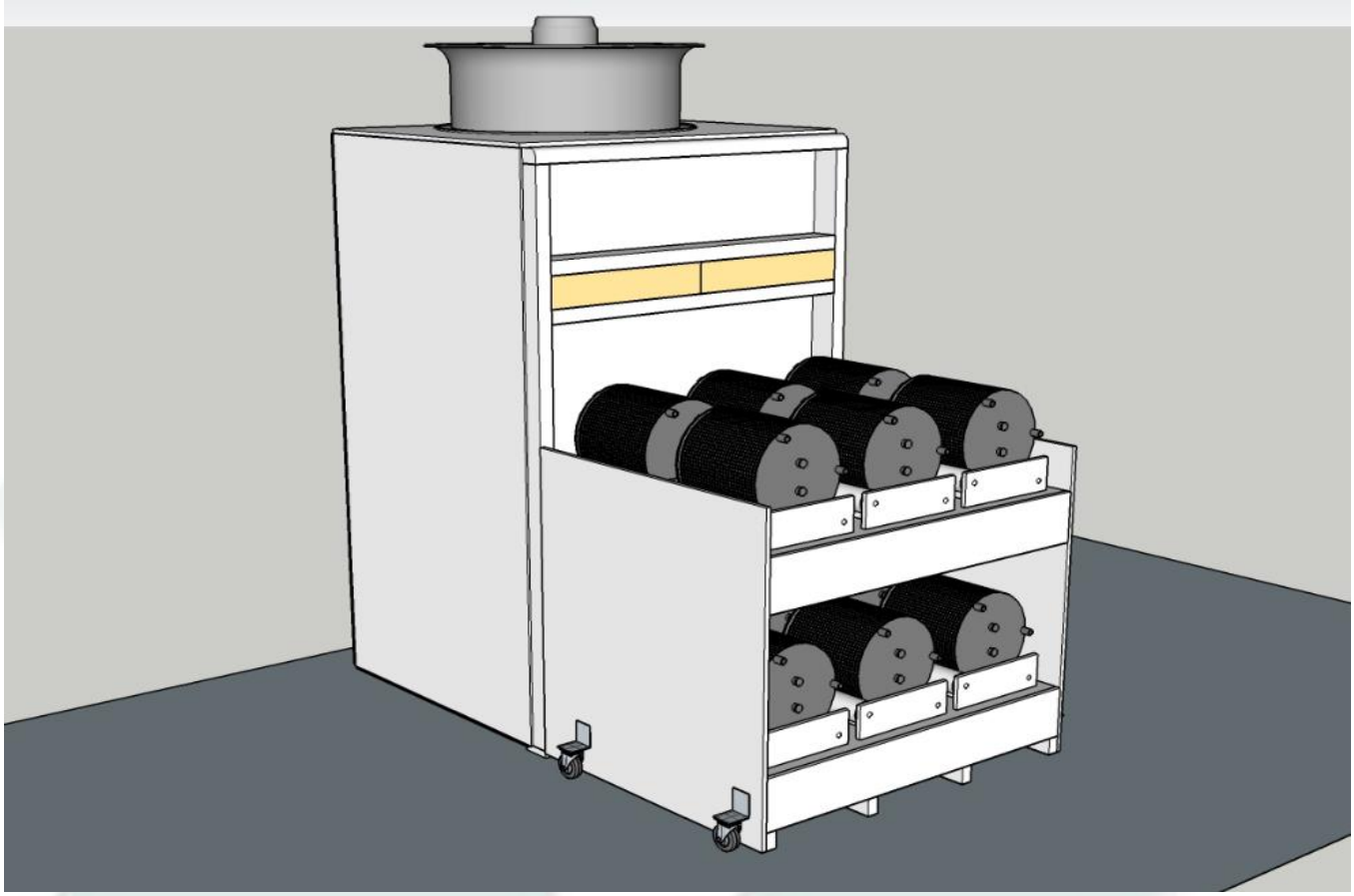

Ventilation unit in front of box drying installation

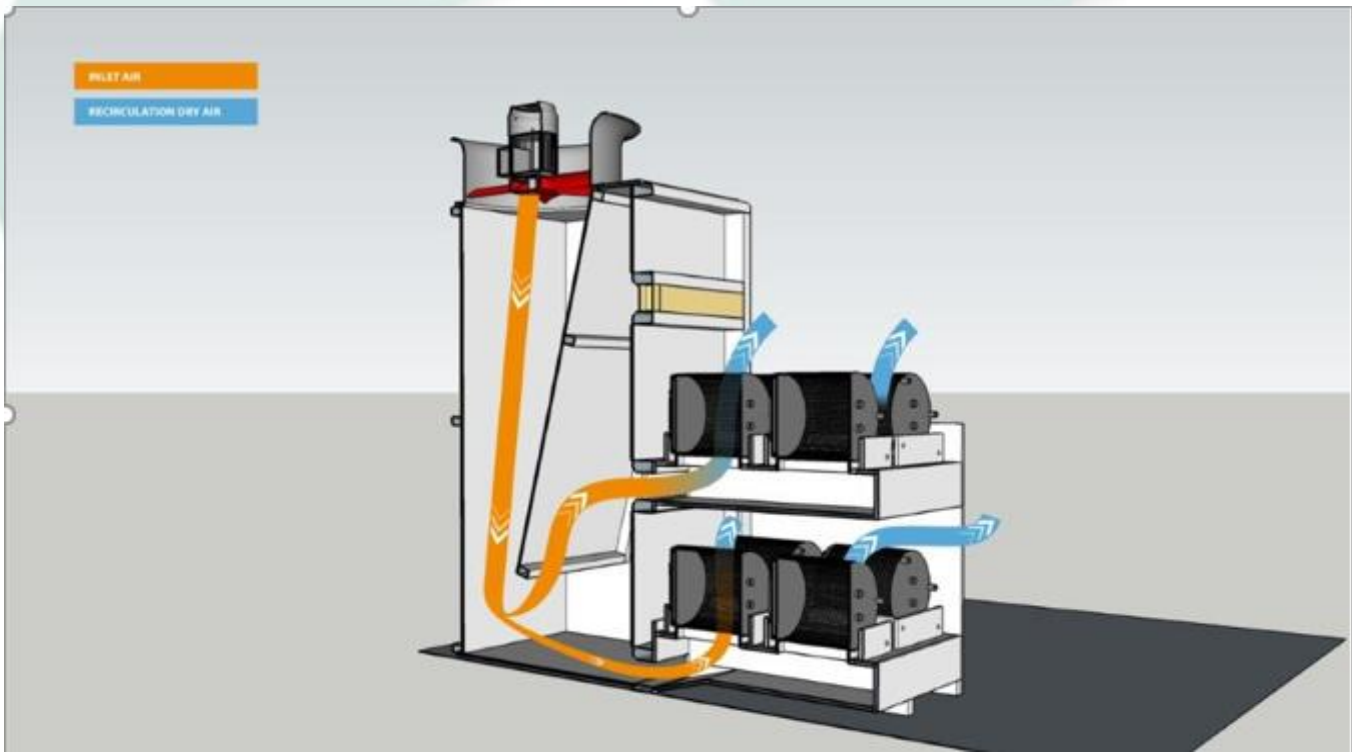

Airflow is controlled by the box drying installation.

Open drum dryer installation

Flexible drying of seed in every processing area

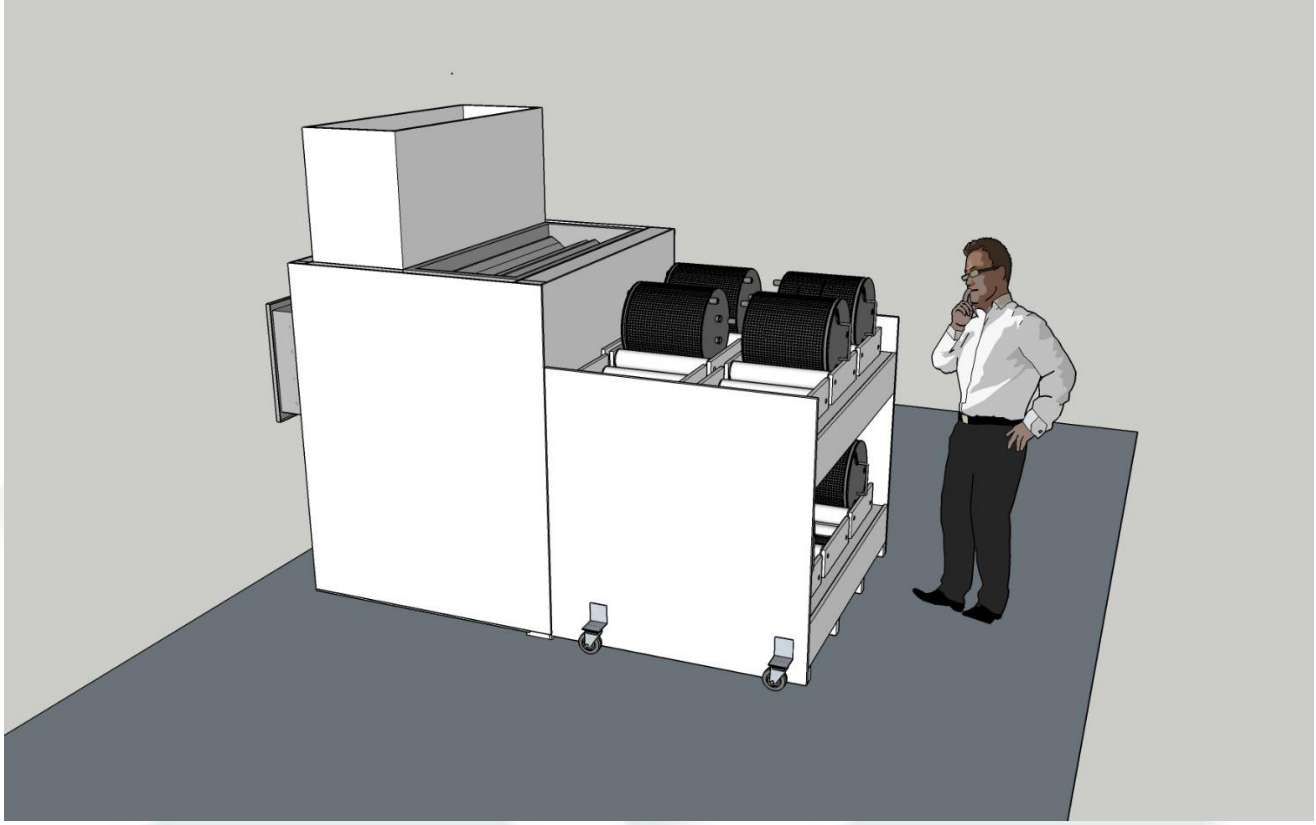

Ventilation unit with open drum dryer installation. Easy to place in every room or processing area.

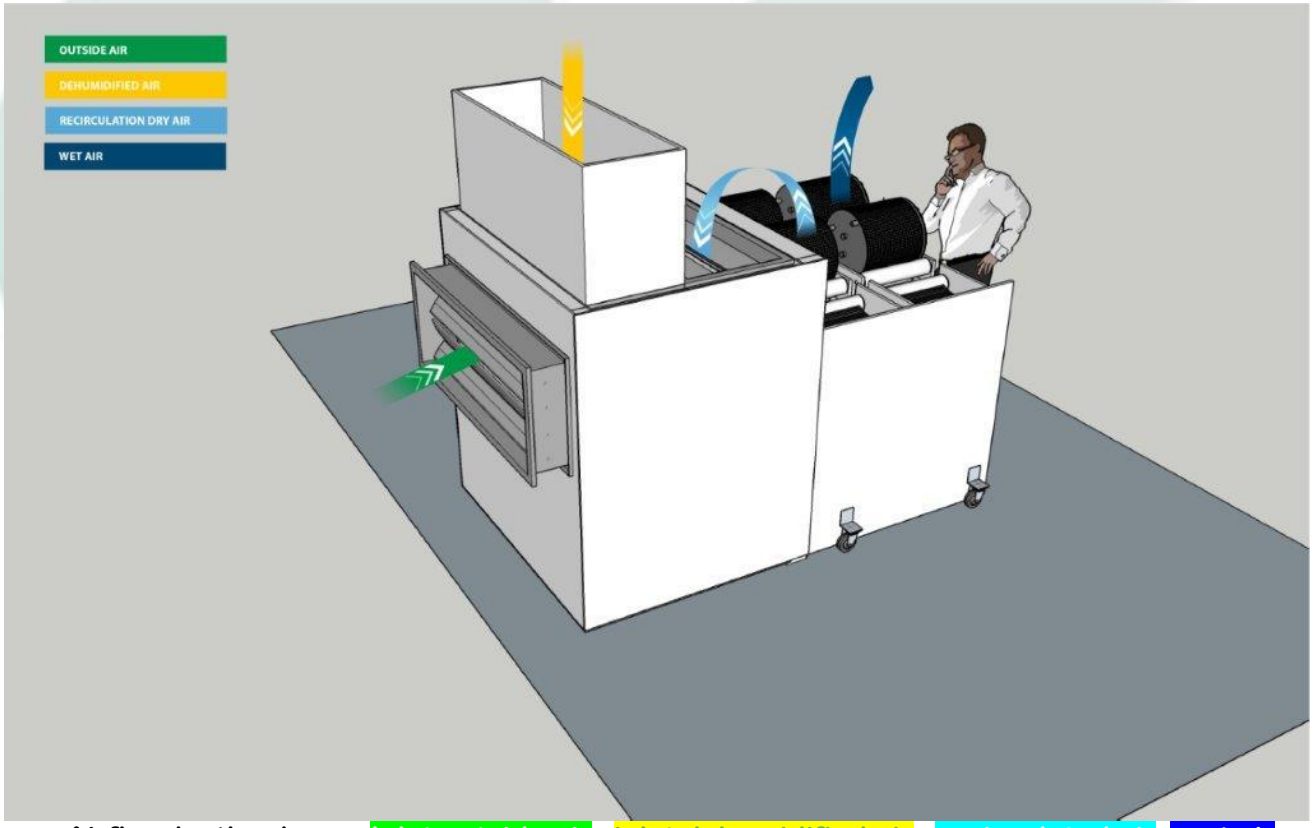

Airflow by the dryer: Inlet outside air inlet dehumidified air recirculated air wet air

Closed drum dryer installation

Drying of seed in a conditioned room with drums.

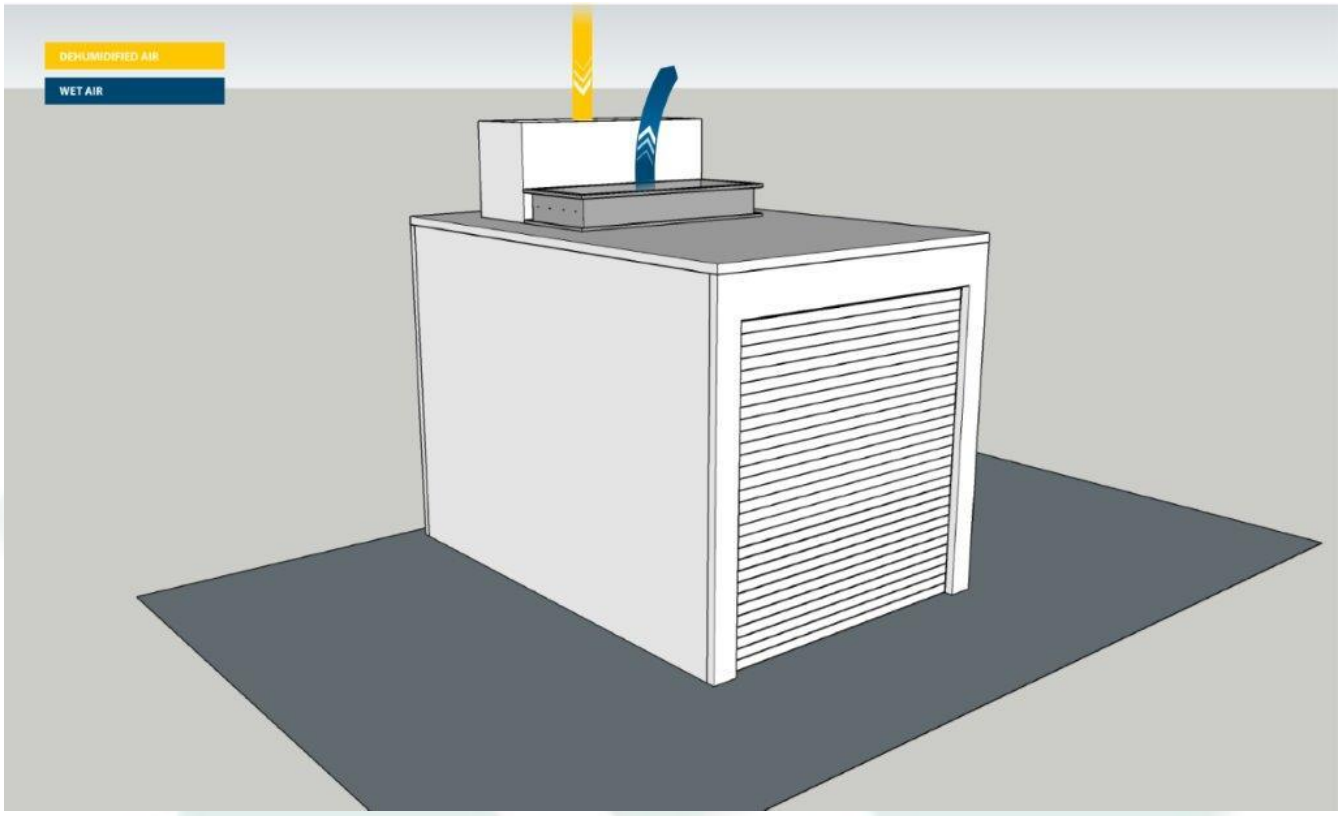

Closed room with drum dryer installation inside. Entrance to the room by a roller shutter.

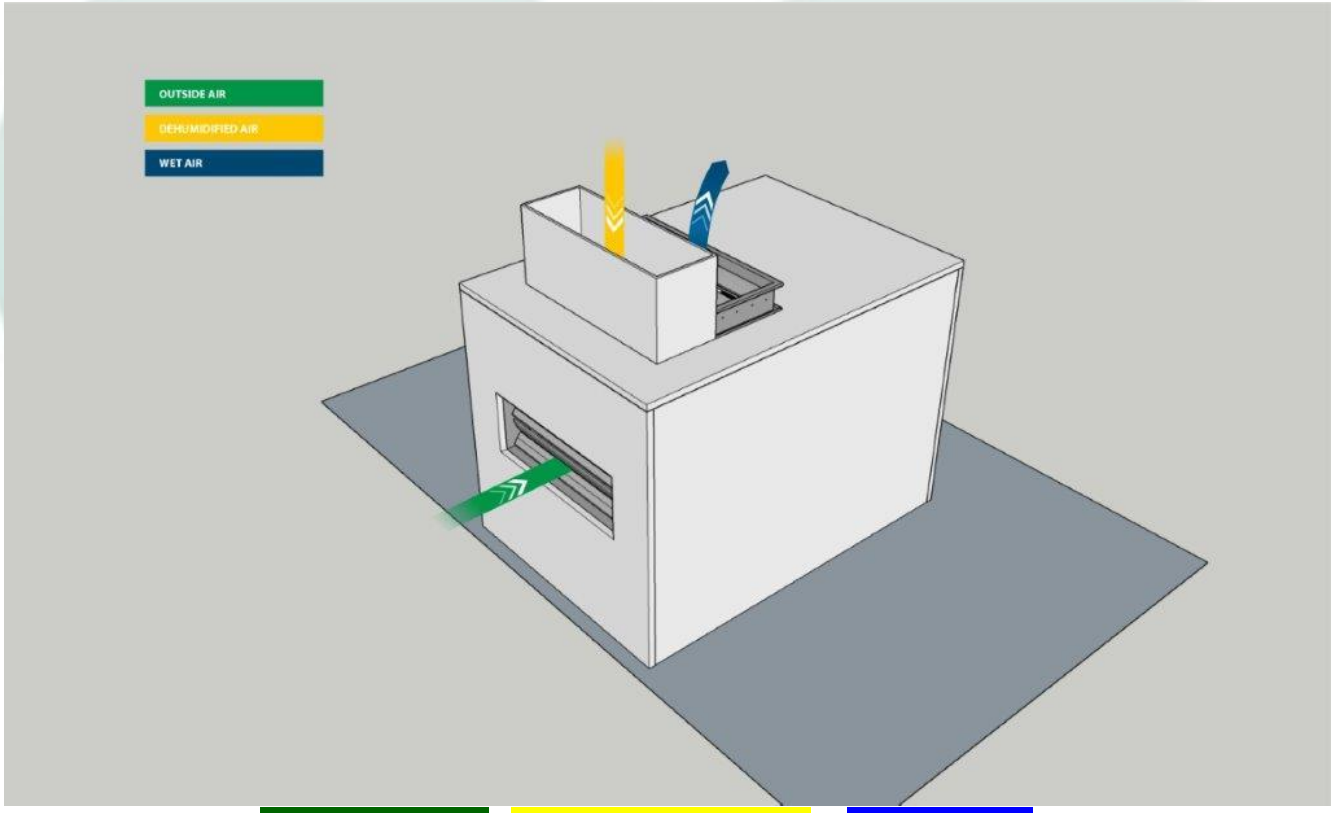

Airflow per room: Inlet outside air inlet dehumidified air outlet wet air

Closed drum dryer installation

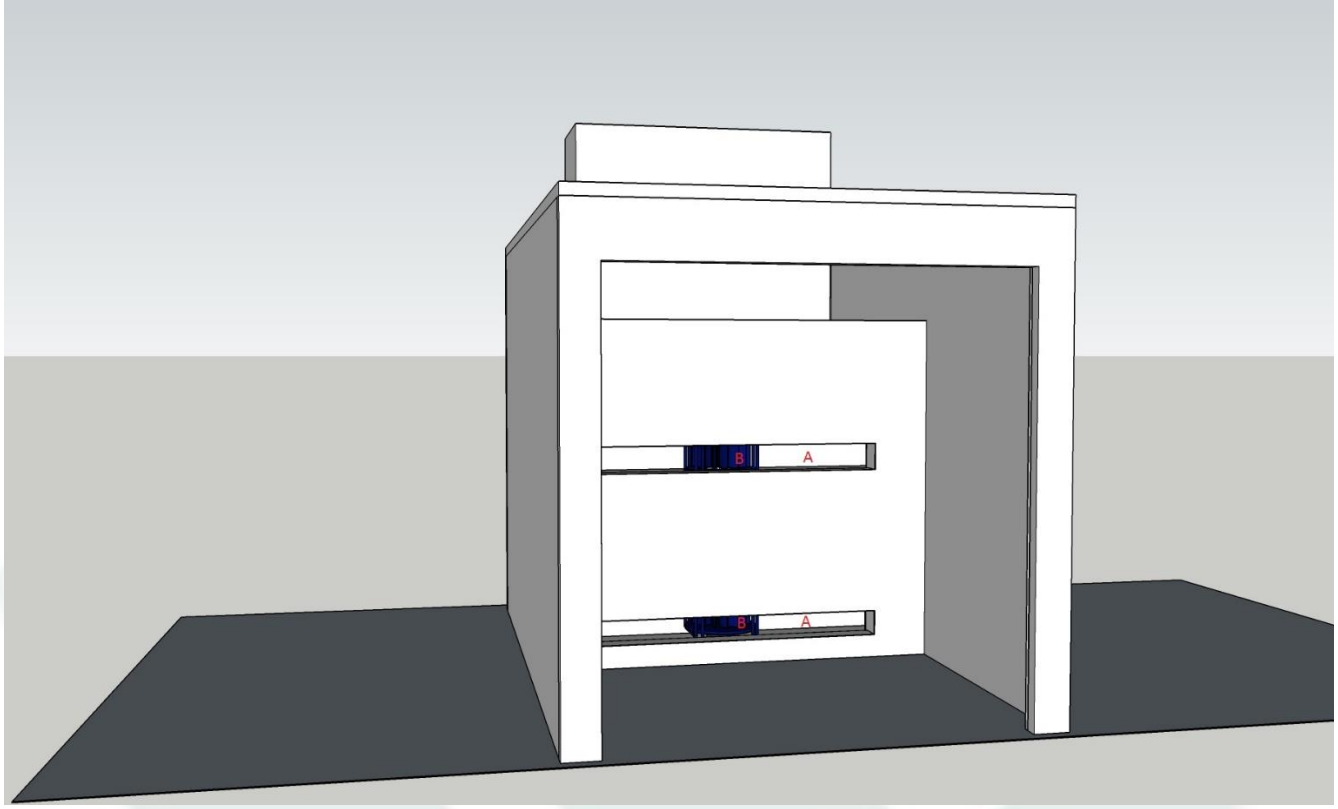

Per drum-level an outlet (A) and per outlet a high pressure fan (B).

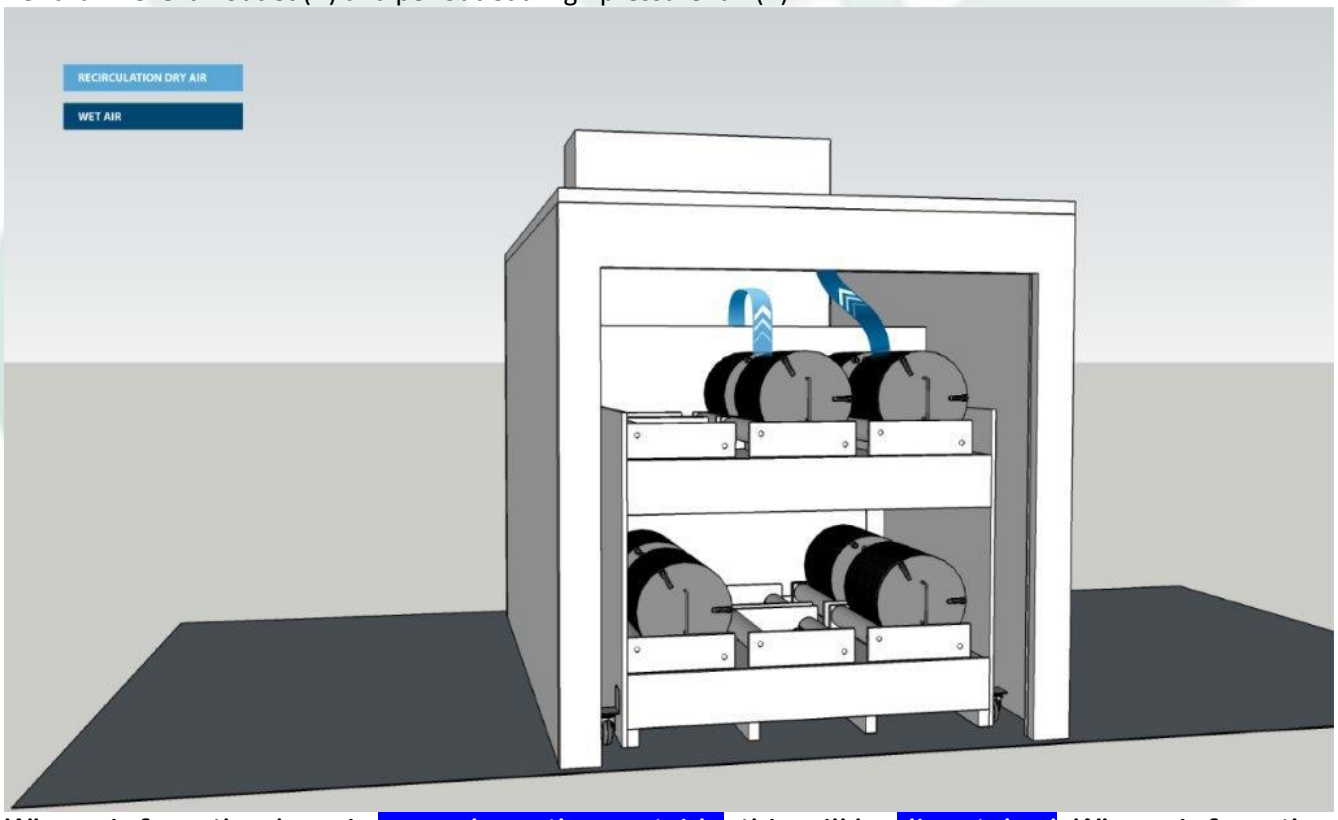

When air from the drum is more damp than outside, this will be dispatched. When air from the drum is dryer than outside, this is recirculated and mixed with dehumidified air.